L78LxxAB
L78LxxAC - L78LxxC

Positive voltage regulators

Features

- Output current up to 100 mA
- Output voltages of 3.3; 5; 6; 8; 9; 10; 12; 15; 18; 24 V
- Thermal overload protection
- Short circuit protection
- No external components are required
- Available in either ±5% (AC) or ±10% (C) selection

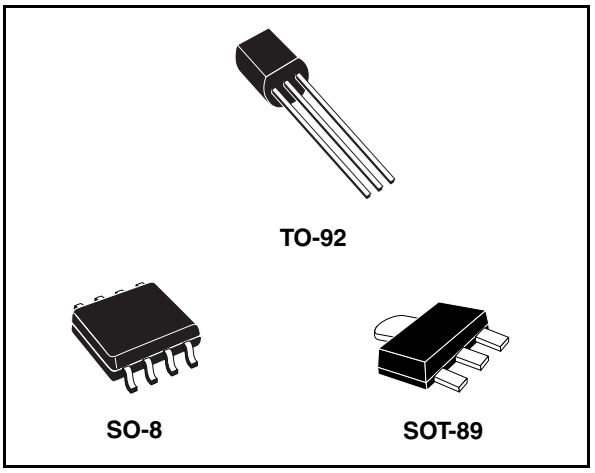

Description

The L78Lxx series of three-terminal positive regulators employ internal current limiting and thermal shutdown, making them essentially indestructible. If adequate heat-sink is provided, they can deliver up to 100 mA output current. They are intended as fixed voltage regulators in a wide range of applications including local or on-card regulation for elimination of noise and distribution problems associated with single-point regulation.

In addition, they can be used with power pass elements to make high-current voltage regulators. The L78Lxx series used as Zener diode/resistor combination replacement, offers an effective output impedance improvement of typically two orders of magnitude, along with lower quiescent current and lower noise.

Table 1. Device summary

Part numbers		
L78L33C	L78L08AC	L78L15C
L78L33AC	L78L08AB	L78L15AC
L78L33AB	L78L09C	L78L15AB
L78L05C	L78L09AC	L78L18C
L78L05AC	L78L09AB	L78L18AC
L78L05AB	L78L10AC	L78L24C
L78L06AC	L78L12C	L78L24AC
L78L06AB	L78L12AC	L78L24AB
L78L08C	L78L12AB	

Contents

1 Diagram 3

2 Pin configuration 4

3 Maximum ratings 5

4 Electrical characteristics 6

5 Typical performance 16

6 Typical application 18

7 Package mechanical data 20

8 Order codes 27

9 Revision history 28

1 Diagram

Figure 1. Schematic diagram

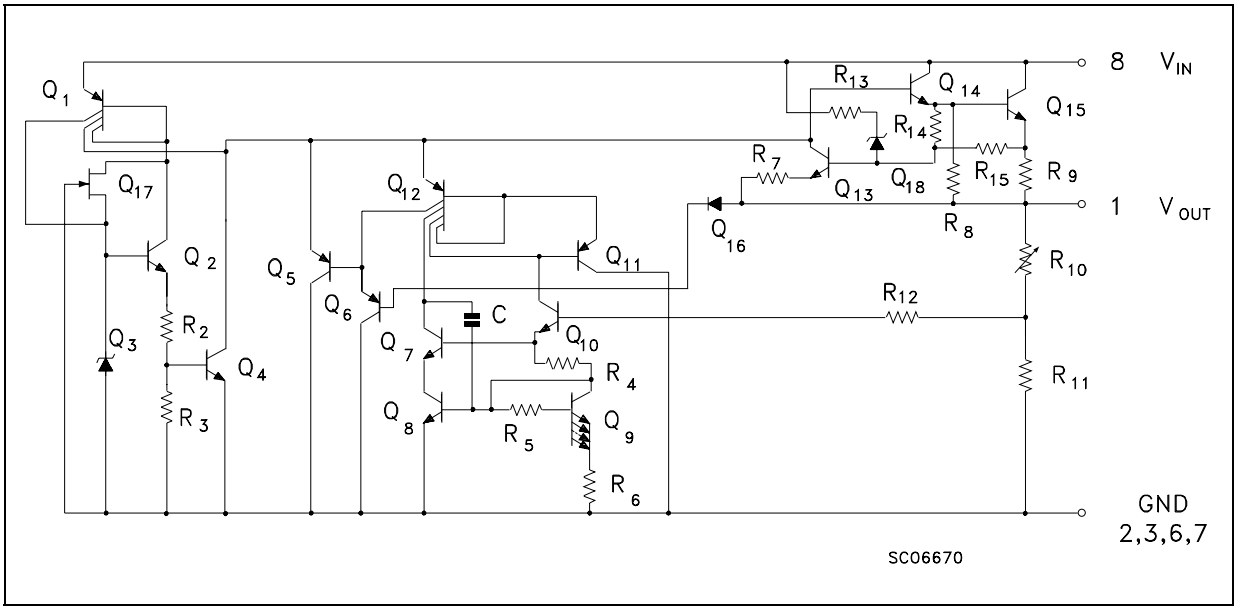

2 Pin configuration

Figure 2. Pin connection (top view, bottom view for TO-92)

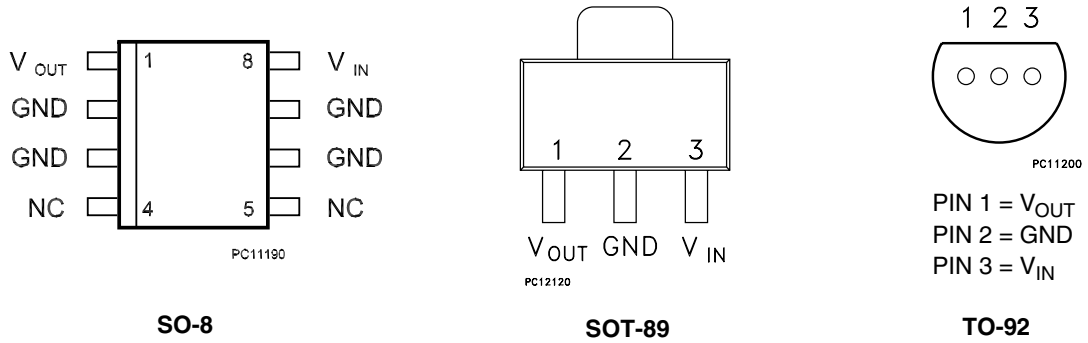

Figure 3. Test circuits

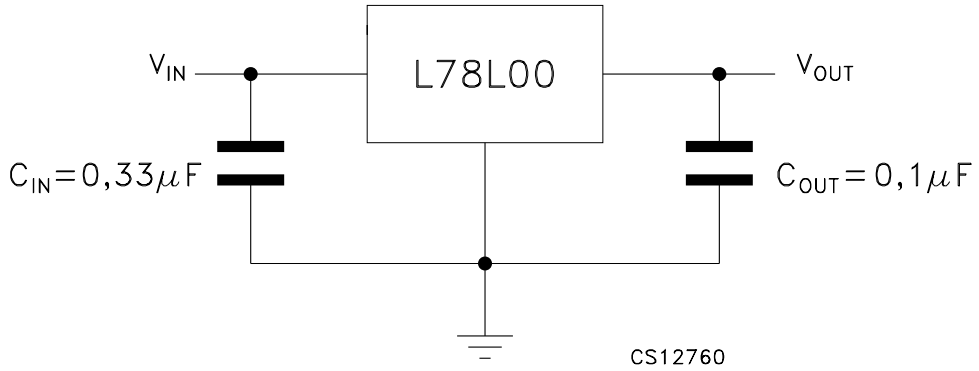

3 Maximum ratings

Table 2. Absolute maximum ratings

Symbol	Parameter		Value	Unit
V_I	DC Input voltage	V_O= 3.3 to 9 V	30	V
		V_O= 12 to 15 V	35	
		V_O= 18 to 24 V	40	
I_O	Output current		100	mA
P_D	Power dissipation		Internally limited (1)	mW
T_{STG}	Storage temperature range		-65 to 150	°C
T_{OP}	Operating junction temperature range	for L78L00AC	0 to 150	°C
		for L78L00AB	-40 to 125	

1. Our SO-8 package used for voltage regulators is modified internally to have pins 2, 3, 6 and 7 electrically communed to the die attach flag. This particular frame decreases the total thermal resistance of the package and increases its ability to dissipate power when an appropriate area of copper on the printed circuit board is available for heat-sinking. The external dimensions are the same as for the standard SO-8.

Table 3. Thermal data

Symbol	Parameter	SO-8	TO-92	SOT-89	Unit
R_{thJC}	Thermal resistance junction-case. (Max)	20		15	°C/W
R_{thJA}	Thermal resistance junction-ambient. (Max)	55 (1)	200		°C/W

1. Considering 6 cm^2 of copper Board heat-sink.

4 Electrical characteristics

Table 4. Electrical characteristics of L78L33C (refer to the test circuits, T_J = 0 to 125°C, V_I = 8.3 V, I_O = 40 mA, C_I = 0.33 µF, C_O = 0.1 µF unless otherwise specified)

Symbol	Parameter	Test conditions	Min.	Typ.	Max.	Unit
V_O	Output voltage	T_J = 25°C	3.036	3.3	3.564	V
V_O	Output voltage	I_O = 1 to 40 mA, V_I = 5.3 to 20 V	2.97		3.63	V
		I_O = 1 to 70 mA, V_I = 8.3 V	2.97		3.63	
ΔV_O	Line regulation	V_I = 5.3 to 20 V, T_J = 25°C			150	mV
		V_I = 6.3 to 20 V, T_J = 25°C			100	
ΔV_O	Load regulation	I_O = 1 to 100 mA, T_J = 25°C			60	mV
		I_O = 1 to 40 mA, T_J = 25°C			30	
I_d	Quiescent current	T_J = 25°C			6	mA
		T_J = 125°C			5.5	mA
ΔI_d	Quiescent current change	I_O = 1 to 40 mA			0.2	mA
		V_I = 6.3 to 20 V			1.5	
eN	Output noise voltage	B =10 Hz to 100 kHz, T_J = 25°C		40		µV
SVR	Supply voltage rejection	V_I = 6.3 to 16.3 V, f = 120 Hz I_O = 40 mA, T_J = 25°C	41	49		dB
V_d	Dropout voltage			1.7		V

Table 5. Electrical characteristics of L78L05C (refer to the test circuits, T_J = 0 to 125°C, V_I = 10 V, I_O = 40 mA, C_I = 0.33 µF, C_O = 0.1 µF unless otherwise specified)

Symbol	Parameter	Test conditions	Min.	Typ.	Max.	Unit
V_O	Output voltage	T_J = 25°C	4.6	5	5.4	V
V_O	Output voltage	I_O = 1 to 40 mA, V_I = 7 to 20 V	4.5		5.5	V
		I_O = 1 to 70 mA, V_I = 10 V	4.5		5.5	
ΔV_O	Line regulation	V_I = 8.5 to 20 V, T_J = 25°C			200	mV
		V_I = 9 to 20 V, T_J = 25°C			150	
ΔV_O	Load regulation	I_O = 1 to 100 mA, T_J = 25°C			60	mV
		I_O = 1 to 40 mA, T_J = 25°C			30	
I_d	Quiescent current	T_J = 25°C			6	mA
		T_J = 125°C			5.5	mA
ΔI_d	Quiescent current change	I_O = 1 to 40 mA			0.2	mA
		V_I = 8 to 20 V			1.5	
eN	Output noise voltage	B =10 Hz to 100 kHz, T_J = 25°C		40		µV
SVR	Supply voltage rejection	V_I = 9 to 20 V, f = 120 Hz I_O = 40 mA, T_J = 25°C	40	49		dB
V_d	Dropout voltage			1.7		V

Table 6. Electrical characteristics of L78L08C (refer to the test circuits, T_J = 0 to 125°C, V_I = 14 V, I_O = 40 mA, C_I = 0.33 µF, C_O = 0.1 µF unless otherwise specified)

Symbol	Parameter	Test conditions	Min.	Typ.	Max.	Unit
V_O	Output voltage	T_J = 25°C	7.36	8	8.64	V
V_O	Output voltage	I_O = 1 to 40 mA, V_I = 8.5 to 20 V	7.2		8.8	V
		I_O = 1 to 70 mA, V_I = 12 V	7.2		8.8	
ΔV_O	Line regulation	V_I = 8.5 to 20 V, T_J = 25°C			200	mV
		V_I = 9 to 20 V, T_J = 25°C			150	
ΔV_O	Load regulation	I_O = 1 to 100 mA, T_J = 25°C			80	mV
		I_O = 1 to 40 mA, T_J = 25°C			40	
I_d	Quiescent current	T_J = 25°C			6	mA
		T_J = 125°C			5.5	mA
ΔI_d	Quiescent current change	I_O = 1 to 40 mA			0.2	mA
		V_I = 8 to 20 V			1.5	
eN	Output noise voltage	B =10 Hz to 100 kHz, T_J = 25°C		60		µV
SVR	Supply voltage rejection	V_I = 9 to 20 V, f = 120 Hz I_O = 40 mA, T_J = 25°C	36	45		dB
V_d	Dropout voltage			1.7		V

Table 7. Electrical characteristics of L78L09C (refer to the test circuits, T_J = 0 to 125°C, V_I = 15 V, I_O = 40 mA, C_I = 0.33 µF, C_O = 0.1 µF unless otherwise specified)

Symbol	Parameter	Test conditions	Min.	Typ.	Max.	Unit
V_O	Output voltage	T_J = 25°C	8.28	9	9.72	V
V_O	Output voltage	I_O = 1 to 40 mA, V_I = 11.5 to 23 V	8.1		9.9	V
		I_O = 1 to 70 mA, V_I = 15 V	8.1		9.9	
ΔV_O	Line regulation	V_I = 11.5 to 23 V, T_J = 25°C			250	mV
		V_I = 12 to 23 V, T_J = 25°C			200	
ΔV_O	Load regulation	I_O = 1 to 100 mA, T_J = 25°C			80	mV
		I_O = 1 to 40 mA, T_J = 25°C			40	
I_d	Quiescent current	T_J = 25°C			6	mA
		T_J = 125°C			5.5	mA
ΔI_d	Quiescent current change	I_O = 1 to 40 mA			0.2	mA
		V_I = 12 to 23 V			1.5	
eN	Output noise voltage	B =10 Hz to 100 kHz, T_J = 25°C		70		µV
SVR	Supply voltage rejection	V_I = 12 to 23 V, f = 120 Hz I_O = 40 mA, T_J = 25°C	36	44		dB
V_d	Dropout voltage			1.7		V

Table 8. Electrical characteristics of L78L10C (refer to the test circuits, T_J = 0 to 125°C, V_I = 16 V, I_O = 40 mA, C_I = 0.33 µF, C_O = 0.1 µF unless otherwise specified)

Symbol	Parameter	Test conditions	Min.	Typ.	Max.	Unit
V_O	Output voltage	T_J = 25°C	9.2	10	10.8	V
V_O	Output voltage	I_O = 1 to 40 mA, V_I = 12.5 to 23 V	9		11	V
		I_O = 1 to 70 mA, V_I = 16 V	9		11	
ΔV_O	Line regulation	V_I = 12.5 to 23 V, T_J = 25°C			230	mV
		V_I = 13 to 23 V, T_J = 25°C			170	
ΔV_O	Load regulation	I_O = 1 to 100 mA, T_J = 25°C			80	mV
		I_O = 1 to 40 mA, T_J = 25°C			40	
I_d	Quiescent current	T_J = 25°C			6	mA
		T_J = 125°C			5.5	mA
ΔI_d	Quiescent current change	I_O = 1 to 40 mA			0.1	mA
		V_I = 13 to 23 V			1.5	
eN	Output noise voltage	B =10Hz to 100kHz, T_J = 25°C		60		µV
SVR	Supply voltage rejection	V_I = 14 to 23 V, f = 120Hz I_O = 40 mA, T_J = 25°C	37	45		dB
V_d	Dropout voltage			1.7		V

Table 9. Electrical characteristics of L78L12C (refer to the test circuits, T_J = 0 to 125°C, V_I = 19 V, I_O = 40 mA, C_I = 0.33 µF, C_O = 0.1 µF unless otherwise specified)

Symbol	Parameter	Test conditions	Min.	Typ.	Max.	Unit
V_O	Output voltage	T_J = 25°C	11.1	12	12.9	V
V_O	Output voltage	I_O = 1 to 40 mA, V_I = 14.5 to 27 V	10.8		13.2	V
		I_O = 1 to 70 mA, V_I = 19 V	10.8		13.2	
ΔV_O	Line regulation	V_I = 14.5 to 27 V, T_J = 25°C			250	mV
		V_I = 16 to 27 V, T_J = 25°C			200	
ΔV_O	Load regulation	I_O = 1 to 100 mA, T_J = 25°C			100	mV
		I_O = 1 to 40 mA, T_J = 25°C			50	
I_d	Quiescent current	T_J = 25°C			6.5	mA
		T_J = 125°C			6	mA
ΔI_d	Quiescent current change	I_O = 1 to 40 mA			0.2	mA
		V_I = 16 to 27 V			1.5	
eN	Output noise voltage	B =10 Hz to 100 kHz, T_J = 25°C		80		µV
SVR	Supply voltage rejection	V_I = 15 to 25 V, f = 120 Hz I_O = 40 mA, T_J = 25°C	36	42		dB
V_d	Dropout voltage			1.7		V

Table 10. Electrical characteristics of L78L15C (refer to the test circuits, T_J = 0 to 125°C, V_I = 23 V, I_O = 40 mA, C_I = 0.33 µF, C_O = 0.1 µF unless otherwise specified)

Symbol	Parameter	Test conditions	Min.	Typ.	Max.	Unit
V_O	Output voltage	T_J = 25°C	13.8	15	16.2	V
V_O	Output voltage	I_O = 1 to 40 mA, V_I = 17.5 to 30 V	13.5		16.5	V
		I_O = 1 to 70 mA, V_I = 23 V	13.5		16.5	
ΔV_O	Line regulation	V_I = 17.5 to 30 V, T_J = 25°C			300	mV
		V_I = 20 to 30 V, T_J = 25°C			250	
ΔV_O	Load regulation	I_O = 1 to 100 mA, T_J = 25°C			150	mV
		I_O = 1 to 40 mA, T_J = 25°C			75	
I_d	Quiescent current	T_J = 25°C			6.5	mA
		T_J = 125°C			6	mA
ΔI_d	Quiescent current change	I_O = 1 to 40 mA			0.2	mA
		V_I = 20 to 30 V			1.5	
eN	Output noise voltage	B =10 Hz to 100 kHz, T_J = 25°C		90		µV
SVR	Supply voltage rejection	V_I = 18.5 to 28.5 V, f = 120 Hz I_O = 40 mA, T_J = 25°C	33	39		dB
V_d	Dropout voltage			1.7		V

Table 11. Electrical characteristics of L78L18C (refer to the test circuits, T_J = 0 to 125°C, V_I = 27 V, I_O = 40 mA, C_I = 0.33 µF, C_O = 0.1 µF unless otherwise specified)

Symbol	Parameter	Test conditions	Min.	Typ.	Max.	Unit
V_O	Output voltage	T_J = 25°C	16.6	18	19.4	V
V_O	Output voltage	I_O = 1 to 40 mA, V_I = 22 to 33 V	16.2		19.8	V
		I_O = 1 to 70 mA, V_I = 27 V	16.2		19.8	
ΔV_O	Line regulation	V_I = 22 to 33 V, T_J = 25°C			320	mV
		V_I = 22 to 33 V, T_J = 25°C			270	
ΔV_O	Load regulation	I_O = 1 to 100 mA, T_J = 25°C			170	mV
		I_O = 1 to 40 mA, T_J = 25°C			85	
I_d	Quiescent current	T_J = 25°C			6.5	mA
		T_J = 125°C			6	mA
ΔI_d	Quiescent current change	I_O = 1 to 40 mA			0.2	mA
		V_I = 23 to 33 V			1.5	
eN	Output noise voltage	B =10 Hz to 100 kHz, T_J = 25°C		120		µV
SVR	Supply voltage rejection	V_I = 23 to 33 V, f = 120 Hz I_O = 40 mA, T_J = 25°C	32	38		dB
V_d	Dropout voltage			1.7		V

Table 12. Electrical characteristics of L78L24C (refer to the test circuits, T_J = 0 to 125°C, V_I = 33 V, I_O = 40 mA, C_I = 0.33 µF, C_O = 0.1 µF unless otherwise specified)

Symbol	Parameter	Test conditions	Min.	Typ.	Max.	Unit
V_O	Output voltage	T_J = 25°C	22.1	24	25.9	V
V_O	Output voltage	I_O = 1 to 40 mA, V_I = 27 to 38 V	21.6		26.4	V
		I_O = 1 to 70 mA, V_I = 33 V	21.6		26.4	
ΔV_O	Line regulation	V_I = 27 to 38 V, T_J = 25°C			350	mV
		V_I = 28 to 38 V, T_J = 25°C			300	
ΔV_O	Load regulation	I_O = 1 to 100 mA, T_J = 25°C			200	mV
		I_O = 1 to 40 mA, T_J = 25°C			100	
I_d	Quiescent current	T_J = 25°C			6.5	mA
		T_J = 125°C			6	mA
ΔI_d	Quiescent current change	I_O = 1 to 40 mA			0.2	mA
		V_I = 28 to 38 V			1.5	
eN	Output noise voltage	B =10 Hz to 100 kHz, T_J = 25°C		200		µV
SVR	Supply voltage rejection	V_I = 29 to 35 V, f = 120 Hz I_O = 40 mA, T_J = 25°C	30	37		dB
V_d	Dropout voltage			1.7		V

Table 13. Electrical characteristics of L78L33AB and L78L33AC (refer to the test circuits, V_I = 8.3 V, I_O = 40 mA, C_I = 0.33 µF, C_O = 0.1 µF, T_J = 0 to 125°C for L78L33AC, T_J = -40 to 125°C for L78L33AB, unless otherwise specified)

Symbol	Parameter	Test conditions	Min.	Typ.	Max.	Unit
V_O	Output voltage	T_J = 25°C	3.168	3.3	3.432	V
V_O	Output voltage	I_O = 1 to 40 mA, V_I = 5.3 to 20 V	3.135		3.465	V
		I_O = 1 to 70 mA, V_I = 8.3 V	3.135		3.465	
ΔV_O	Line regulation	V_I = 5.3 to 20 V, T_J = 25°C			150	mV
		V_I = 6.3 to 20 V, T_J = 25°C			100	
ΔV_O	Load regulation	I_O = 1 to 100 mA, T_J = 25°C			60	mV
		I_O = 1 to 40 mA, T_J = 25°C			30	
I_d	Quiescent current	T_J = 25°C			6	mA
		T_J = 125°C			5.5	mA
ΔI_d	Quiescent current change	I_O = 1 to 40 mA			0.1	mA
		V_I = 6.3 to 20 V			1.5	
eN	Output noise voltage	B =10 Hz to 100 kHz, T_J = 25°C		40		µV
SVR	Supply voltage rejection	V_I = 6.3 to 16.3 V, f = 120 Hz I_O = 40 mA, T_J = 25°C	41	49		dB
V_d	Dropout voltage			1.7		V

Table 14. Electrical characteristics of L78L05AB and L78L05AC (refer to the test circuits, V_I = 10 V, I_O = 40 mA, C_I = 0.33 µF, C_O = 0.1 µF, T_J = 0 to 125°C for L78L05AC, T_J = -40 to 125°C for L78L05AB, unless otherwise specified)

Symbol	Parameter	Test conditions	Min.	Typ.	Max.	Unit
V_O	Output voltage	T_J = 25°C	4.8	5	5.2	V
V_O	Output voltage	I_O = 1 to 40 mA, V_I = 7 to 20 V	4.75		5.25	V
		I_O = 1 to 70 mA, V_I = 10 V	4.75		5.25	
ΔV_O	Line regulation	V_I = 7 to 20 V, T_J = 25°C			150	mV
		V_I = 8 to 20 V, T_J = 25°C			100	
ΔV_O	Load regulation	I_O = 1 to 100 mA, T_J = 25°C			60	mV
		I_O = 1 to 40 mA, T_J = 25°C			30	
I_d	Quiescent current	T_J = 25°C			6	mA
		T_J = 125°C			5.5	mA
ΔI_d	Quiescent current change	I_O = 1 to 40 mA			0.1	mA
		V_I = 8 to 20 V			1.5	
eN	Output noise voltage	B =10 Hz to 100 kHz, T_J = 25°C		40		µV
SVR	Supply voltage rejection	V_I = 8 to 18 V, f = 120 Hz I_O = 40 mA, T_J = 25°C	41	49		dB
V_d	Dropout voltage			1.7		V

Table 15. Electrical characteristics of L78L06AB and L78L06AC (refer to the test circuits, V_I = 12 V, I_O = 40 mA, C_I = 0.33 µF, C_O = 0.1 µF, T_J = 0 to 125°C for L78L06AC, T_J = -40 to 125°C for L78L06AB, unless otherwise specified)

Symbol	Parameter	Test conditions	Min.	Typ.	Max.	Unit
V_O	Output voltage	T_J = 25°C	5.76	6	6.24	V
V_O	Output voltage	I_O = 1 to 40 mA, V_I = 8.5 to 20 V	5.7		6.3	V
		I_O = 1 to 70 mA, V_I = 12 V	5.7		6.3	
ΔV_O	Line regulation	V_I = 8.5 to 20 V, T_J = 25°C			150	mV
		V_I = 9 to 20 V, T_J = 25°C			100	
ΔV_O	Load regulation	I_O = 1 to 100 mA, T_J = 25°C			60	mV
		I_O = 1 to 40 mA, T_J = 25°C			30	
I_d	Quiescent current	T_J = 25°C			6	mA
		T_J = 125°C			5.5	mA
ΔI_d	Quiescent current change	I_O = 1 to 40 mA			0.1	mA
		V_I = 9 to 20 V			1.5	
eN	Output noise voltage	B =10 Hz to 100 kHz, T_J = 25°C		50		µV
SVR	Supply voltage rejection	V_I = 9 to 20 V, f = 120 Hz I_O = 40 mA, T_J = 25°C	39	46		dB
V_d	Dropout voltage			1.7		V

Table 16. Electrical characteristics of L78L08AB and L78L08AC (refer to the test circuits, V_I = 14 V, I_O = 40 mA, C_I = 0.33 µF, C_O = 0.1 µF, T_J = 0 to 125°C for L78L08AC, T_J = -40 to 125°C for L78L08AB, unless otherwise specified)

Symbol	Parameter	Test conditions	Min.	Typ.	Max.	Unit
V_O	Output voltage	T_J = 25°C	7.68	8	8.32	V
V_O	Output voltage	I_O = 1 to 40 mA, V_I = 10.5 to 23 V	7.6		8.4	V
		I_O = 1 to 70 mA, V_I = 14 V	7.6		8.4	
ΔV_O	Line regulation	V_I = 10.5 to 23 V, T_J = 25°C			175	mV
		V_I = 11 to 23 V, T_J = 25°C			125	
ΔV_O	Load regulation	I_O = 1 to 100 mA, T_J = 25°C			80	mV
		I_O = 1 to 40 mA, T_J = 25°C			40	
I_d	Quiescent current	T_J = 25°C			6	mA
		T_J = 125°C			5.5	mA
ΔI_d	Quiescent current change	I_O = 1 to 40 mA			0.1	mA
		V_I = 11 to 23 V			1.5	
eN	Output noise voltage	B =10 Hz to 100 kHz, T_J = 25°C		60		µV
SVR	Supply voltage rejection	V_I = 12 to 23 V, f = 120 Hz I_O = 40 mA, T_J = 25°C	37	45		dB
V_d	Dropout voltage			1.7		V

Table 17. Electrical characteristics of L78L09AB and L78L09AC (refer to the test circuits, V_I = 15 V, I_O = 40 mA, C_I = 0.33 µF, C_O = 0.1 µF, T_J = 0 to 125°C for L78L09AC, T_J = -40 to 125°C for L78L09AB, unless otherwise specified)

Symbol	Parameter	Test conditions	Min.	Typ.	Max.	Unit
V_O	Output voltage	T_J = 25°C	8.64	9	9.36	V
V_O	Output voltage	I_O = 1 to 40 mA, V_I = 11.5 to 23 V	8.55		9.45	V
		I_O = 1 to 70 mA, V_I = 15 V	8.55		9.45	
ΔV_O	Line regulation	V_I = 11.5 to 23 V, T_J = 25°C			225	mV
		V_I = 12 to 23 V, T_J = 25°C			150	
ΔV_O	Load regulation	I_O = 1 to 100 mA, T_J = 25°C			80	mV
		I_O = 1 to 40 mA, T_J = 25°C			40	
I_d	Quiescent current	T_J = 25°C			6	mA
		T_J = 125°C			5.5	mA
ΔI_d	Quiescent current change	I_O = 1 to 40 mA			0.1	mA
		V_I = 12 to 23 V			1.5	
eN	Output noise voltage	B =10 Hz to 100 kHz, T_J = 25°C		70		µV
SVR	Supply voltage rejection	V_I = 12 to 23 V, f = 120 Hz I_O = 40 mA, T_J = 25°C	37	44		dB
V_d	Dropout voltage			1.7		V

Table 18. Electrical characteristics of L78L10AC (refer to the test circuits, V_I = 16 V, I_O = 40 mA, C_I = 0.33 µF, C_O = 0.1 µF, T_J = 0 to 125°C for L78L10AC, T_J = -40 to 125°C for L78L10AB, unless otherwise specified)

Symbol	Parameter	Test conditions	Min.	Typ.	Max.	Unit
V_O	Output voltage	T_J = 25°C	9.6	10	10.4	V
V_O	Output voltage	I_O = 1 to 40 mA, V_I = 12.5 to 23 V	9.5		10.5	V
		I_O = 1 to 70 mA, V_I = 16 V	9.5		10.5	
ΔV_O	Line regulation	V_I = 12.5 to 23 V, T_J = 25°C			230	mV
		V_I = 13 to 23 V, T_J = 25°C			170	
ΔV_O	Load regulation	I_O = 1 to 100 mA, T_J = 25°C			80	mV
		I_O = 1 to 40 mA, T_J = 25°C			40	
I_d	Quiescent current	T_J = 25°C			6	mA
		T_J = 125°C			5.5	mA
ΔI_d	Quiescent current change	I_O = 1 to 40 mA			0.1	mA
		V_I = 13 to 23 V			1.5	
eN	Output noise voltage	B =10 Hz to 100 kHz, T_J = 25°C		60		µV
SVR	Supply voltage rejection	V_I = 14 to 23 V, f = 120 Hz I_O = 40 mA, T_J = 25°C	37	45		dB
V_d	Dropout voltage			1.7		V

Table 19. Electrical characteristics of L78L12AB and L78L12AC (refer to the test circuits, V_I = 19 V, I_O = 40 mA, C_I = 0.33 µF, C_O = 0.1 µF, T_J = 0 to 125°C for L78L12AC, T_J = -40 to 125°C for L78L12AB, unless otherwise specified)

Symbol	Parameter	Test conditions	Min.	Typ.	Max.	Unit
V_O	Output voltage	T_J = 25°C	11.5	12	12.5	V
V_O	Output voltage	I_O = 1 to 40 mA, V_I = 14.5 to 27 V	11.4		12.6	V
		I_O = 1 to 70 mA, V_I = 19 V	11.4		12.6	
ΔV_O	Line regulation	V_I = 14.5 to 27 V, T_J = 25°C			250	mV
		V_I = 16 to 27 V, T_J = 25°C			200	
ΔV_O	Load regulation	I_O = 1 to 100 mA, T_J = 25°C			100	mV
		I_O = 1 to 40 mA, T_J = 25°C			50	
I_d	Quiescent current	T_J = 25°C			6.5	mA
		T_J = 125°C			6	mA
ΔI_d	Quiescent current change	I_O = 1 to 40 mA			0.1	mA
		V_I = 16 to 27 V			1.5	
eN	Output noise voltage	B =10 Hz to 100 kHz, T_J = 25°C		80		µV
SVR	Supply voltage rejection	V_I = 15 to 25 V, f = 120 Hz I_O = 40 mA, T_J = 25°C	37	42		dB
V_d	Dropout voltage			1.7		V

Table 20. Electrical characteristics of L78L15AB and L78L15AC (refer to the test circuits, V_I = 23 V, I_O = 40 mA, C_I = 0.33 µF, C_O = 0.1 µF, T_J = 0 to 125°C for L78L15AC, T_J = -40 to 125°C for L78L15AB, unless otherwise specified)

Symbol	Parameter	Test conditions	Min.	Typ.	Max.	Unit
V_O	Output voltage	T_J = 25°C	14.4	15	15.6	V
V_O	Output voltage	I_O = 1 to 40 mA, V_I = 17.5 to 30 V	14.25		15.75	V
		I_O = 1 to 70 mA, V_I = 23 V	14.25		15.75	
ΔV_O	Line regulation	V_I = 17.5 to 30 V, T_J = 25°C			300	mV
		V_I = 20 to 30 V, T_J = 25°C			250	
ΔV_O	Load regulation	I_O = 1 to 100 mA, T_J = 25°C			150	mV
		I_O = 1 to 40 mA, T_J = 25°C			75	
I_d	Quiescent current	T_J = 25°C			6.5	mA
		T_J = 125°C			6	mA
ΔI_d	Quiescent current change	I_O = 1 to 40 mA			0.1	mA
		V_I = 20 to 30 V			1.5	
eN	Output noise voltage	B =10 Hz to 100 kHz, T_J = 25°C		90		µV
SVR	Supply voltage rejection	V_I = 18.5 to 28.5 V, f = 120 Hz I_O = 40 mA, T_J = 25°C	34	39		dB
V_d	Dropout voltage			1.7		V

Table 21. Electrical characteristics of L78L18AC (refer to the test circuits, V_I = 27 V, I_O = 40 mA, C_I = 0.33 µF, C_O = 0.1 µF, T_J = 0 to 125°C for L78L18AC, T_J = -40 to 125°C for L78L18AB, unless otherwise specified)

Symbol	Parameter	Test conditions	Min.	Typ.	Max.	Unit
V_O	Output voltage	T_J = 25°C	17.3	18	18.7	V
V_O	Output voltage	I_O = 1 to 40 mA, V_I = 22 to 33 V	17.1		18.9	V
		I_O = 1 to 70 mA, V_I = 27 V	17.1		18.9	
ΔV_O	Line regulation	V_I = 22 to 33 V, T_J = 25°C			320	mV
		V_I = 22 to 33 V, T_J = 25°C			270	
ΔV_O	Load regulation	I_O = 1 to 100 mA, T_J = 25°C			170	mV
		I_O = 1 to 40 mA, T_J = 25°C			85	
I_d	Quiescent current	T_J = 25°C			6.5	mA
		T_J = 125°C			6	mA
ΔI_d	Quiescent current change	I_O = 1 to 40 mA			0.1	mA
		V_I = 23 to 33 V			1.5	
eN	Output noise voltage	B =10 Hz to 100 kHz, T_J = 25°C		120		µV
SVR	Supply voltage rejection	V_I = 23 to 33 V, f = 120 Hz I_O = 40 mA, T_J = 25°C	33	38		dB
V_d	Dropout voltage			1.7		V

Table 22. Electrical characteristics of L78L24AB and L78L24AC (refer to the test circuits, V_I = 33 V, I_O = 40 mA, C_I = 0.33 µF, C_O = 0.1 µF, T_J = 0 to 125°C for L78L24AC, T_J = -40 to 125°C for L78L24AB, unless otherwise specified)

Symbol	Parameter	Test conditions	Min.	Typ.	Max.	Unit
V_O	Output voltage	T_J = 25°C	23	24	25	V
V_O	Output voltage	I_O = 1 to 40 mA, V_I = 27 to 38 V	22.8		25.2	V
		I_O = 1 to 70 mA, V_I = 33 V	22.8		25.2	
ΔV_O	Line regulation	V_I = 27 to 38 V, T_J = 25°C			350	mV
		V_I = 28 to 38 V, T_J = 25°C			300	
ΔV_O	Load regulation	I_O = 1 to 100 mA, T_J = 25°C			200	mV
		I_O = 1 to 40 mA, T_J = 25°C			100	
I_d	Quiescent current	T_J = 25°C			6.5	mA
		T_J = 125°C			6	mA
ΔI_d	Quiescent current change	I_O = 1 to 40 mA			0.1	mA
		V_I = 28 to 38 V			1.5	
eN	Output noise voltage	B =10 Hz to 100 kHz, T_J = 25°C		200		µV
SVR	Supply voltage rejection	V_I = 29 to 33 V, f = 120 Hz I_O = 40 mA, T_J = 25°C	31	37		dB
V_d	Dropout voltage			1.7		V

5 Typical performance

Figure 4. L78L05/12 output voltage vs ambient temperature

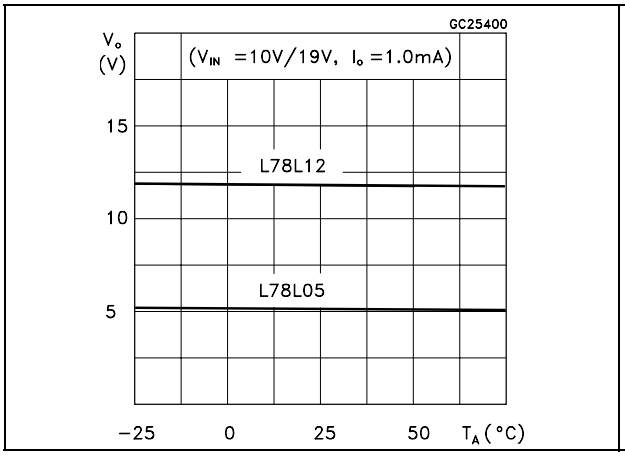

Figure 5. L78L05/12/24 load characteristics

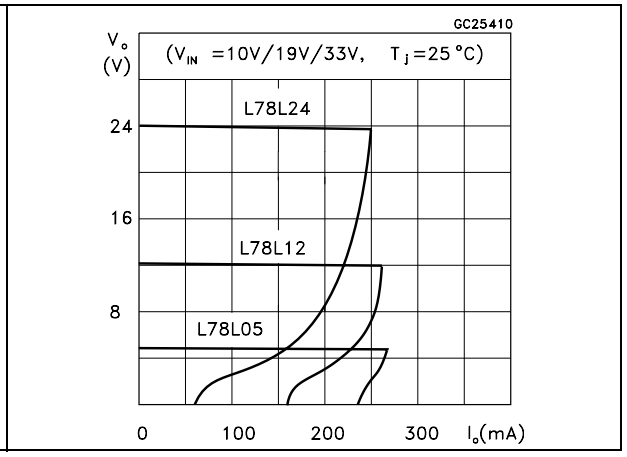

Figure 6. L78L05/12/24 thermal shutdown

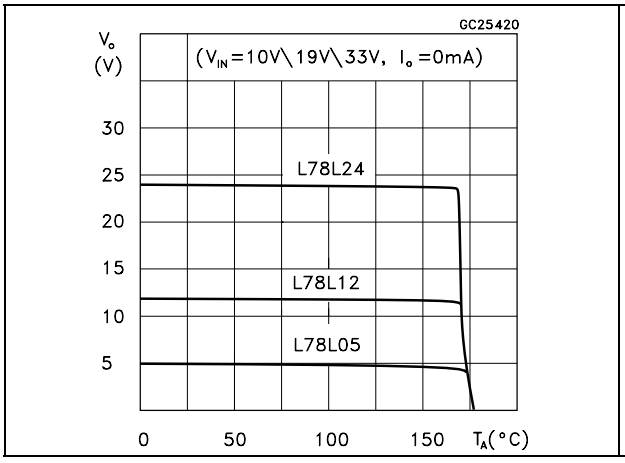

Figure 7. L78L05/12 quiescent current vs output current

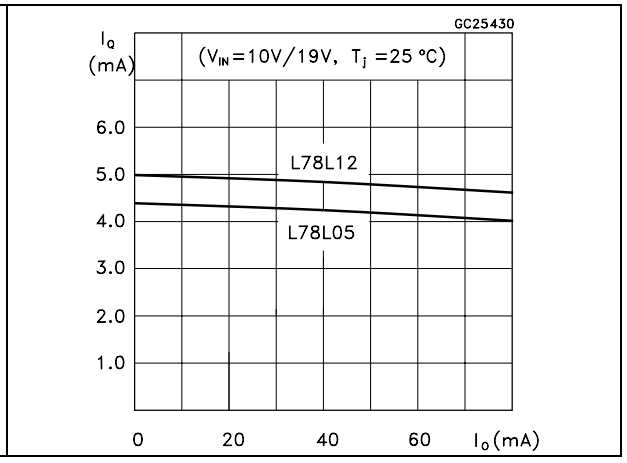

Figure 8. L78L05 quiescent current vs input voltage

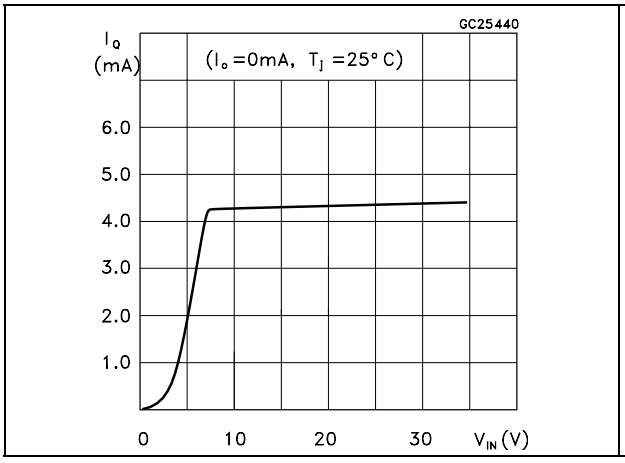

Figure 9. L78L05/12/24 output characteristics

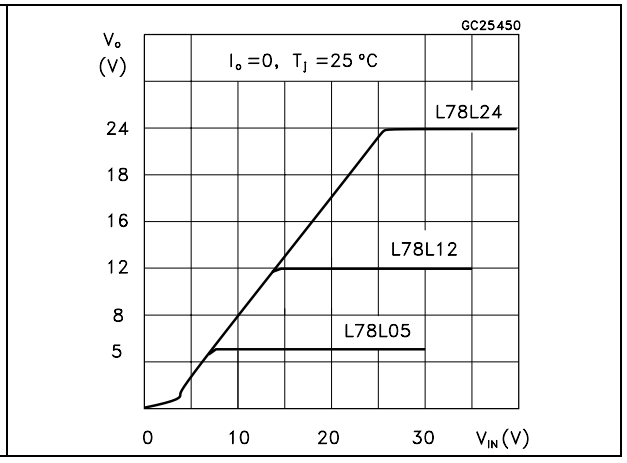

Figure 10. L78L05/12/24 ripple rejection

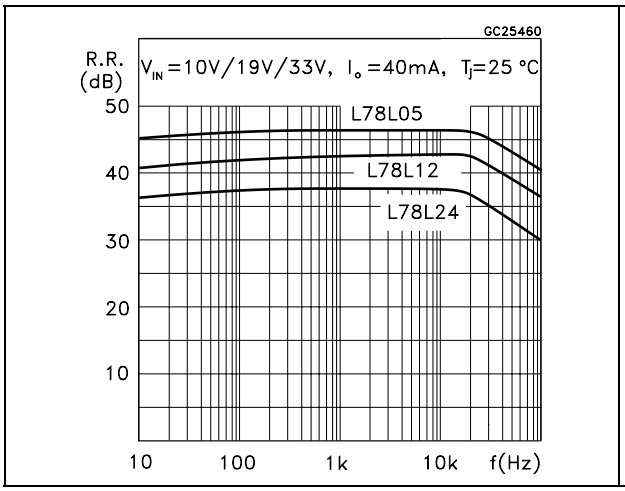

Figure 11. L78L05 dropout characteristics

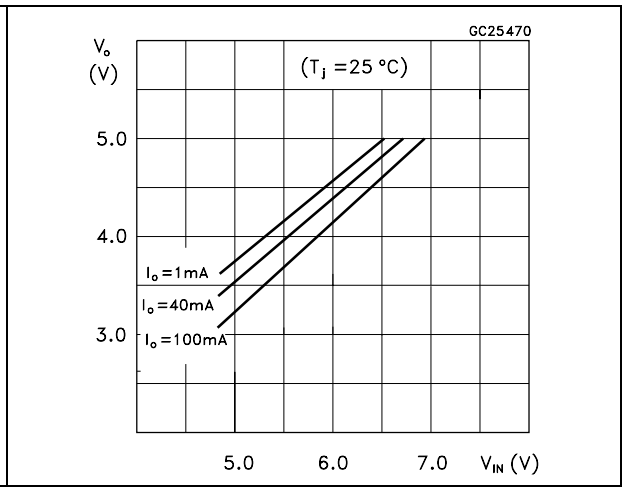

Figure 12. L78Lxx short circuit output current

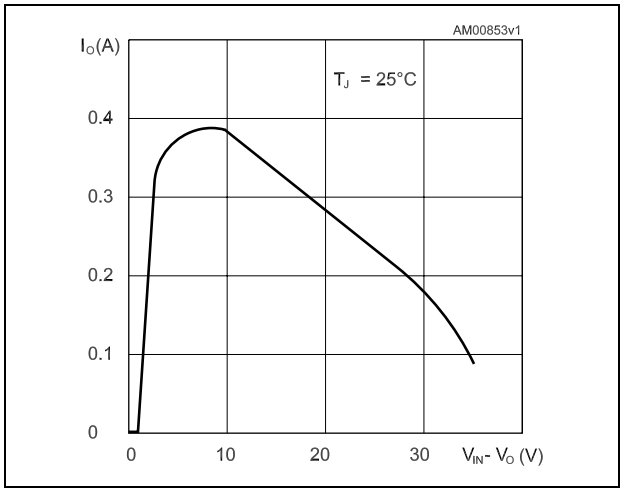

6 Typical application

Figure 13. High output current short circuit protected

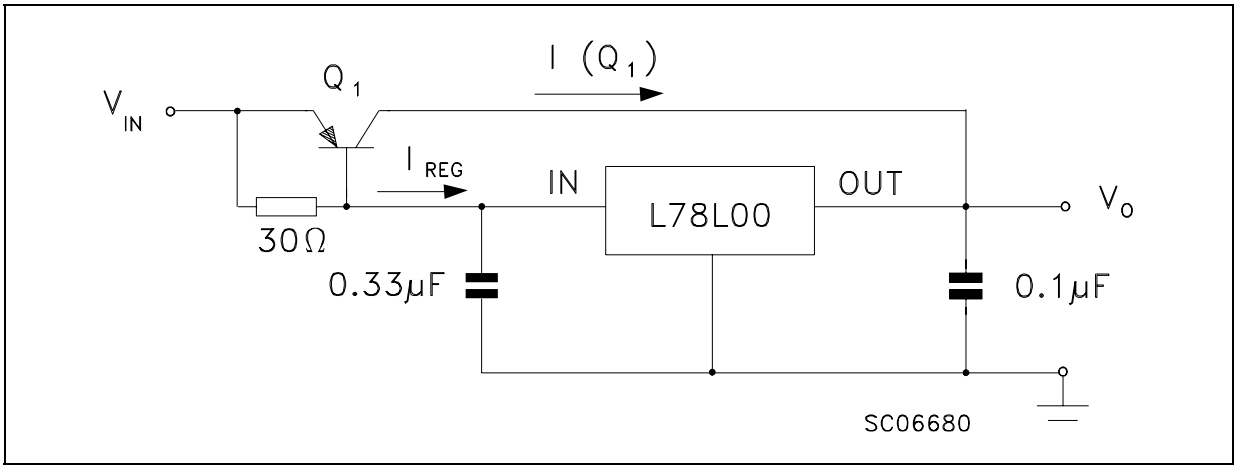

Figure 14. Edit boost circuit

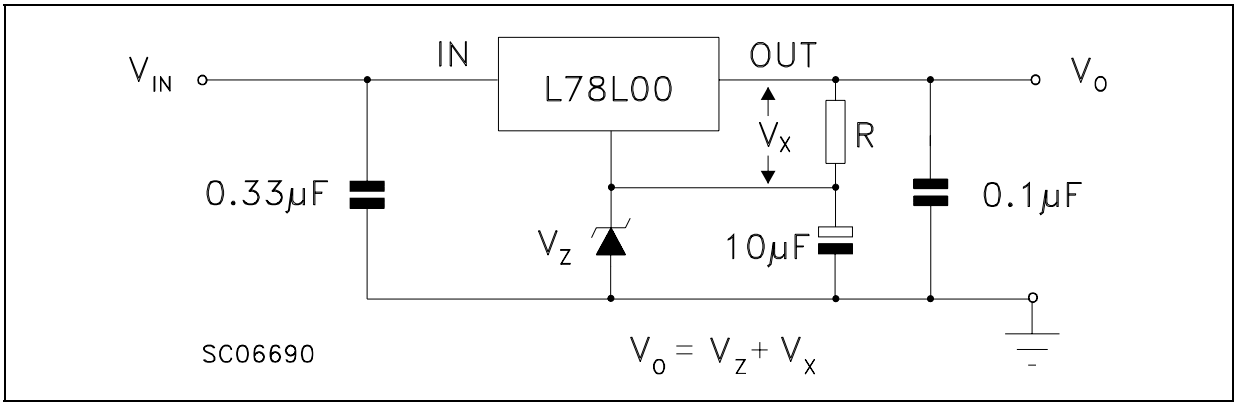

Figure 15. Current regulator

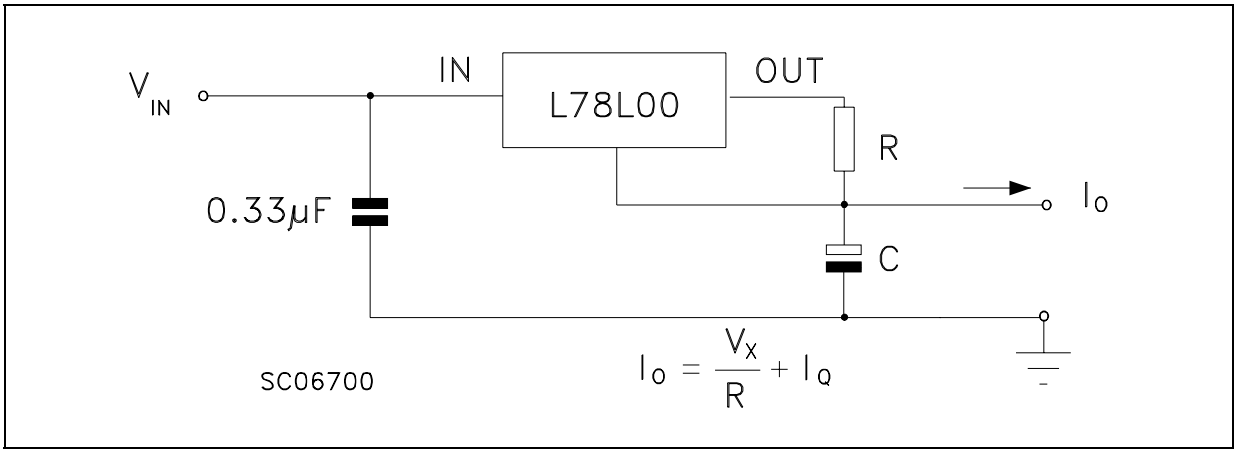

Figure 16. Adjustable output regulator

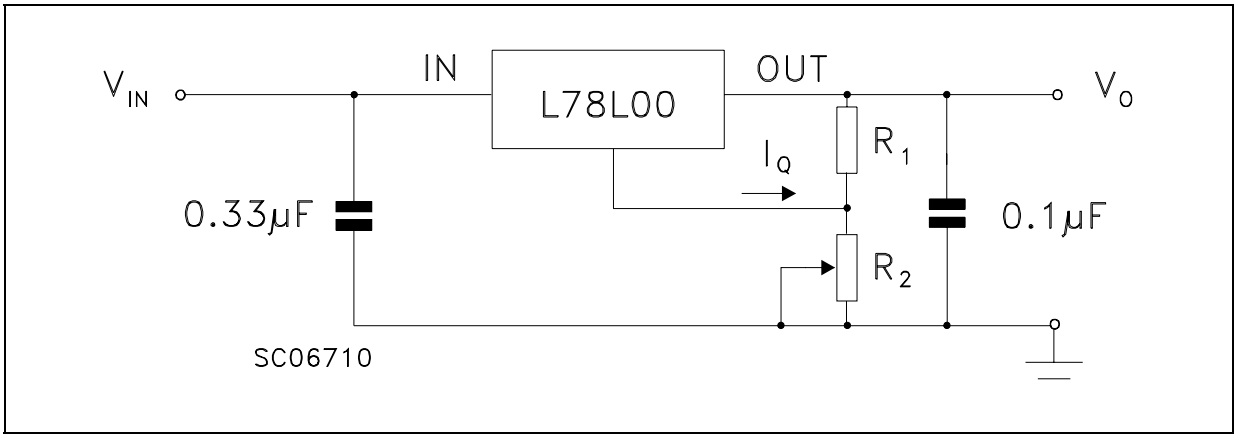

7 Package mechanical data

In order to meet environmental requirements, ST offers these devices in ECOPACK® packages. These packages have a lead-free second level interconnect. The category of second Level Interconnect is marked on the package and on the inner box label, in compliance with JEDEC Standard JESD97. The maximum ratings related to soldering conditions are also marked on the inner box label. ECOPACK is an ST trademark. ECOPACK specifications are available at: www.st.com.

SO-8 mechanical data

Dim.	mm.			inch.		
	Min.	Typ.	Max.	Min.	Typ.	Max.
A	1.35		1.75	0.053		0.069
A1	0.10		0.25	0.04		0.010
A2	1.10		1.65	0.043		0.065
B	0.33		0.51	0.013		0.020
C	0.19		0.25	0.007		0.010
D	4.80		5.00	0.189		0.197
E	3.80		4.00	0.150		0.157
e		1.27			0.050	
H	5.80		6.20	0.228		0.244
h	0.25		0.50	0.010		0.020
L	0.40		1.27	0.016		0.050
k	8° (max.)					
ddd			0.1			0.04

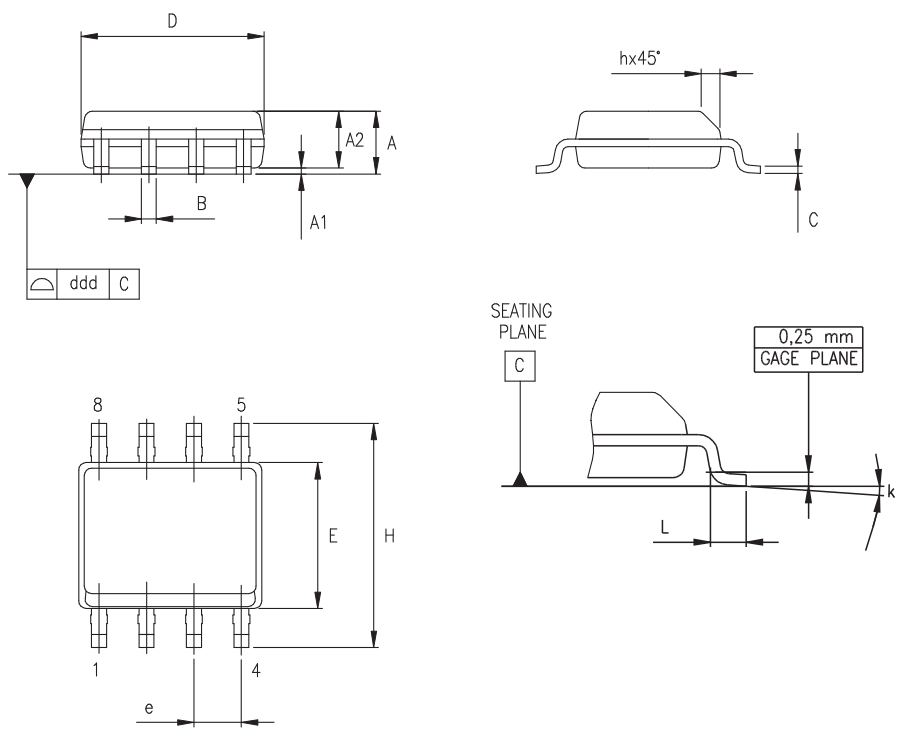

0016023/C

SOT-89 mechanical data

Dim.	mm.			mils.		
	Min.	Typ.	Max.	Min.	Typ.	Max.
A	1.4		1.6	55.1		63.0
B	0.44		0.56	17.3		22.0
B1	0.36		0.48	14.2		18.9
C	0.35		0.44	13.8		17.3
C1	0.35		0.44	13.8		17.3
D	4.4		4.6	173.2		181.1
D1	1.62		1.83	63.8		72.0
E	2.29		2.6	90.2		102.4
e	1.42		1.57	55.9		61.8
e1	2.92		3.07	115.0		120.9
H	3.94		4.25	155.1		167.3
L	0.89		1.2	35.0		47.2

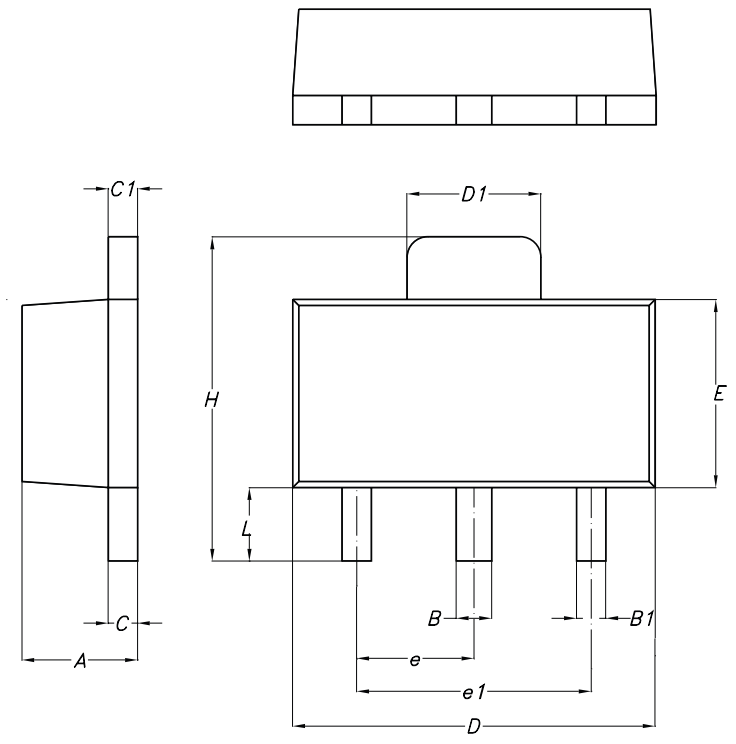

P025H

TO-92 mechanical data

Dim.	mm.			mils.		
	Min.	Typ.	Max.	Min.	Typ.	Max.
A	4.32		4.95	170.1		194.9
b	0.36		0.51	14.2		20.1
D	4.45		4.95	175.2		194.9
E	3.30		3.94	129.9		155.1
e	2.41		2.67	94.9		105.1
e1	1.14		1.40	44.9		55.1
L	12.7		15.49	500.0		609.8
R	2.16		2.41	85.0		94.9
S1	0.92		1.52	36.2		59.8
W	0.41		0.56	16.1		22.0
α		5°			5°	

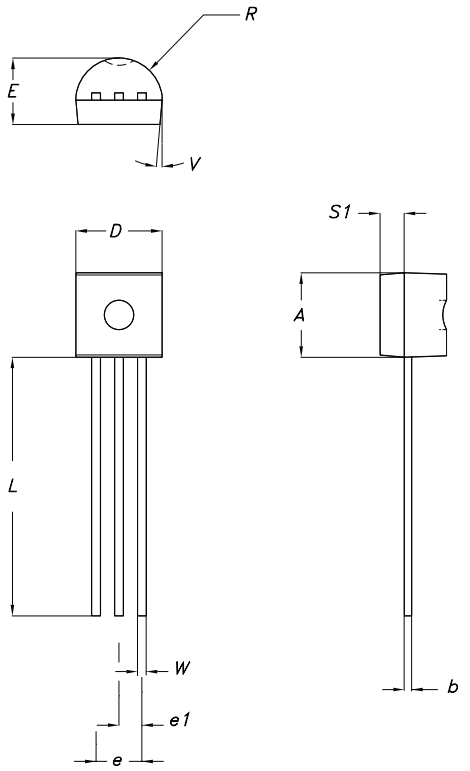

0102782/D

Tape & reel SO-8 mechanical data

Dim.	mm.			inch.		
	Min.	Typ.	Max.	Min.	Typ.	Max.
A			330			12.992
C	12.8		13.2	0.504		0.519
D	20.2			0.795		
N	60			2.362		
T			22.4			0.882
Ao	8.1		8.5	0.319		0.335
Bo	5.5		5.9	0.216		0.232
Ko	2.1		2.3	0.082		0.090
Po	3.9		4.1	0.153		0.161
P	7.9		8.1	0.311		0.319

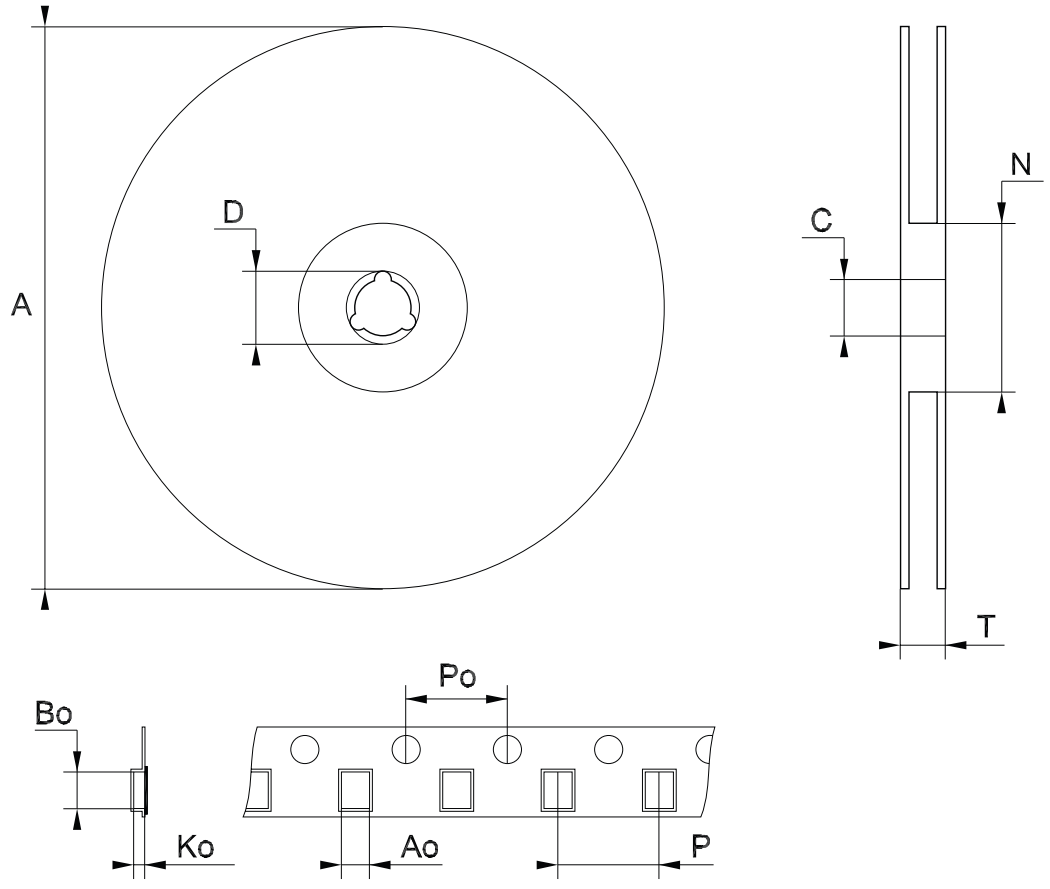

Note: Drawing not in scale

Tape & reel SOT-89 mechanical data

Dim.	mm.			inch.		
	Min.	Typ.	Max.	Min.	Typ.	Max.
A			180			7.086
C	12.8	13.0	13.2	0.504	0.512	0.519
D	20.2			0.795		
N	60			2.362		
T			14.4			0.567
Ao	4.70	4.80	4.90	0.185	0.189	0.193
Bo	4.30	4.40	4.50	0.169	0.173	0.177
Ko	1.70	1.80	1.90	0.067	0.071	0.075
Po	3.9	4.0	4.1	0.153	0.157	0.161
P	7.9	8.0	8.1	0.311	0.315	0.319

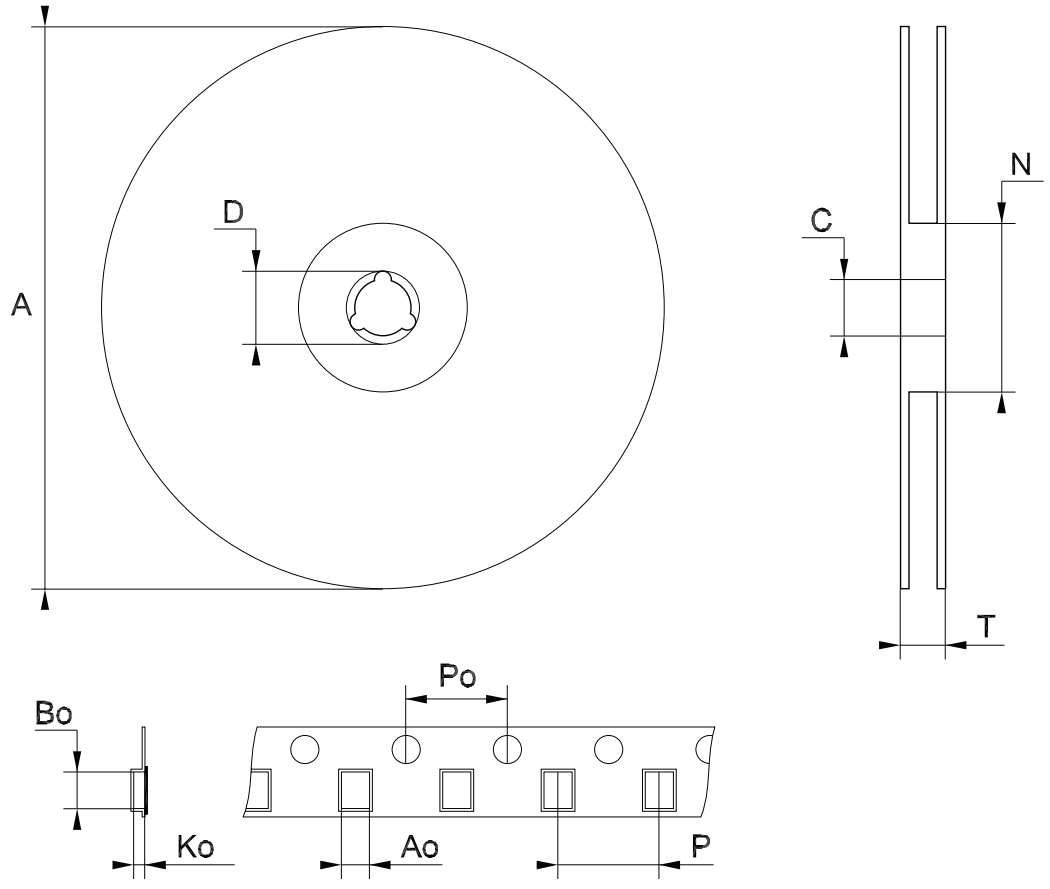

Note: Drawing not in scale

Tape & reel for TO-92 mechanical data

Dim.	mm.			inch.		
	Min.	Typ.	Max.	Min.	Typ.	Max.
A1		4.80			0.189	
T		3.80			0.150	
T1		1.60			0.063	
T2		2.30			0.091	
d		0.48			0.019	
P0	12.5		12.9	0.492		0.508
P2	5.65		7.05	0.222		0.278
F1, F2	2.44	2.54	2.94	0.096	0.100	0.116
delta H		±2			0.079	
W	17.5	18.00	19.0	0.689	0.709	0.748
W0	5.7		6.3	0.224		0.248
W1	8.5		9.25	0.335		0.364
W2		0.50			0.20	
H		18.50	18.70		0.728	0.726
H0	15.50		16.50	0.610		0.650
H1		25.00			0.984	
D0	3.8		4.2	0.150		0.165
t		0.90			0.035	
L1		3			0.118	
delta P		±1			0.039	
u		50			1.968	
Φ1		360			14.173	
Φ2		30			1.181	

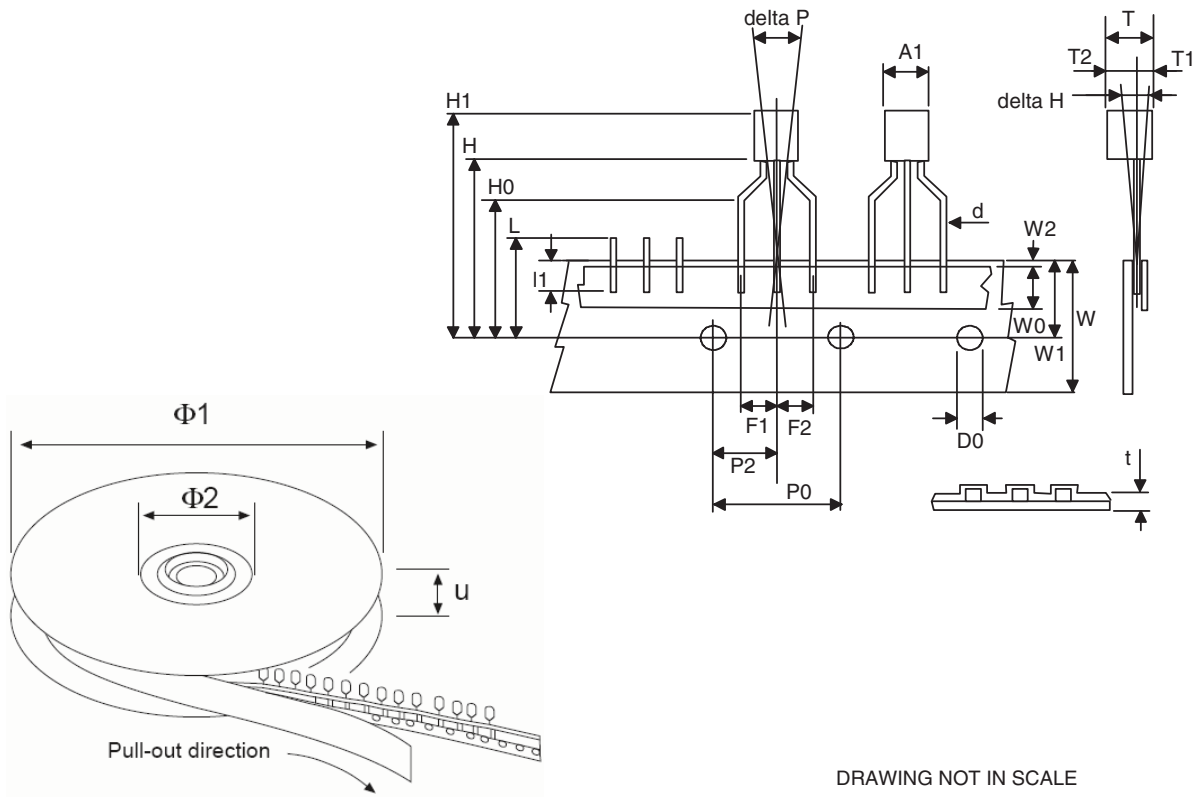

8 Order codes

Table 23. Order codes

Part numbers	Packaging			Output voltage
	SO-8	TO92 (BAG) (1)	SOT-89	
L78L33C	L78L33CD-TR			3.3 V
L78L33AC	L78L33ACD13TR	L78L33ACZ	L78L33ACUTR	3.3 V
L78L33AB	L78L33ABD-TR	L78L33ABZ	L78L33ABUTR	3.3 V
L78L05C	L78L05CD13TR	L78L05CZ		5 V
L78L05AC	L78L05ACD13TR	L78L05ACZ	L78L05ACUTR	5 V
L78L05AB	L78L05ABD13TR	L78L05ABZ	L78L05ABUTR	5 V
L78L06AC	L78L06ACD13TR	L78L06ACZ	L78L06ACUTR	6 V
L78L06AB	L78L06ABD13TR	L78L06ABZ	L78L06ABUTR	6 V
L78L08C	L78L08CD13TR			8 V
L78L08AC	L78L08ACD13TR	L78L08ACZ	L78L08ACUTR	8 V
L78L08AB	L78L08ABD13TR	L78L08ABZ	L78L08ABUTR	8 V
L78L09C	L78L09CD13TR			9 V
L78L09AC	L78L09ACD13TR	L78L09ACZ	L78L09ACUTR	9 V
L78L09AB	L78L09ABD13TR	L78L09ABZ	L78L09ABUTR	9 V
L78L10AC			L78L10ACUTR	10 V
L78L12C	L78L12CD13TR			12 V
L78L12AC	L78L12ACD13TR	L78L12ACZ	L78L12ACUTR	12 V
L78L12AB	L78L12ABD-TR	L78L12ABZ	L78L12ABUTR	12 V
L78L15C	L78L15CD-TR			15 V
L78L15AC	L78L15ACD13TR	L78L15ACZ	L78L15ACUTR	15 V
L78L15AB		L78L15ABZ	L78L15ABUTR	15 V
L78L18C	L78L18CD13TR			18 V
L78L18AC	L78L18ACD13TR		L78L18ACUTR	18 V
L78L24C	L78L24CD-TR			24 V
L78L24AC	L78L24ACD-TR	L78L24ACZ	L78L24ACUTR	24 V
L78L24AB	L78L24ABD13TR	L78L24ABZ	L78L24ABUTR	24 V

1. Available in Ammopak with the suffix "-AP" or in Tape & Reel with the suffix "TR". Please note that in these cases pins are shaped according to Tape & Reel specifications.

9 Revision history

Table 24. Document revision history

Date	Revision	Changes
14-Mar-2005	9	Add tape & reel for TO-92.
15-Mar-2005	10	Add note on Table 3.
23-Dec-2005	11	Mistake on ordering Table in header.
12-Sep-2006	12	Order codes updated.
07-Jun-2007	13	Order codes updated.
18-Sep-2007	14	Added *Table 1* in cover page.
15-Jul-2008	15	Modified: *Table 1 on page 1* and *Table 23 on page 27*.
18-Aug-2008	16	Modified *Figure 12 on page 17*.

Please Read Carefully:

Information in this document is provided solely in connection with ST products. STMicroelectronics NV and its subsidiaries (“ST”) reserve the right to make changes, corrections, modifications or improvements, to this document, and the products and services described herein at any time, without notice.

All ST products are sold pursuant to ST’s terms and conditions of sale.

Purchasers are solely responsible for the choice, selection and use of the ST products and services described herein, and ST assumes no liability whatsoever relating to the choice, selection or use of the ST products and services described herein.

No license, express or implied, by estoppel or otherwise, to any intellectual property rights is granted under this document. If any part of this document refers to any third party products or services it shall not be deemed a license grant by ST for the use of such third party products or services, or any intellectual property contained therein or considered as a warranty covering the use in any manner whatsoever of such third party products or services or any intellectual property contained therein.

UNLESS OTHERWISE SET FORTH IN ST’S TERMS AND CONDITIONS OF SALE ST DISCLAIMS ANY EXPRESS OR IMPLIED WARRANTY WITH RESPECT TO THE USE AND/OR SALE OF ST PRODUCTS INCLUDING WITHOUT LIMITATION IMPLIED WARRANTIES OF MERCHANTABILITY, FITNESS FOR A PARTICULAR PURPOSE (AND THEIR EQUIVALENTS UNDER THE LAWS OF ANY JURISDICTION), OR INFRINGEMENT OF ANY PATENT, COPYRIGHT OR OTHER INTELLECTUAL PROPERTY RIGHT.

UNLESS EXPRESSLY APPROVED IN WRITING BY AN AUTHORIZED ST REPRESENTATIVE, ST PRODUCTS ARE NOT RECOMMENDED, AUTHORIZED OR WARRANTED FOR USE IN MILITARY, AIR CRAFT, SPACE, LIFE SAVING, OR LIFE SUSTAINING APPLICATIONS, NOR IN PRODUCTS OR SYSTEMS WHERE FAILURE OR MALFUNCTION MAY RESULT IN PERSONAL INJURY, DEATH, OR SEVERE PROPERTY OR ENVIRONMENTAL DAMAGE. ST PRODUCTS WHICH ARE NOT SPECIFIED AS "AUTOMOTIVE GRADE" MAY ONLY BE USED IN AUTOMOTIVE APPLICATIONS AT USER’S OWN RISK.

Resale of ST products with provisions different from the statements and/or technical features set forth in this document shall immediately void any warranty granted by ST for the ST product or service described herein and shall not create or extend in any manner whatsoever, any liability of ST.

ST and the ST logo are trademarks or registered trademarks of ST in various countries.

Information in this document supersedes and replaces all information previously supplied.

The ST logo is a registered trademark of STMicroelectronics. All other names are the property of their respective owners.

© 2008 STMicroelectronics - All rights reserved

STMicroelectronics group of companies

Australia - Belgium - Brazil - Canada - China - Czech Republic - Finland - France - Germany - Hong Kong - India - Israel - Italy - Japan - Malaysia - Malta - Morocco - Singapore - Spain - Sweden - Switzerland - United Kingdom - United States of America

www.st.com